DESIGN and LOGO CERTIFIED | The product design is registered with the European Union Intellectual Property Office - Certificate No: 003793041-0001
The product design is also registered in Russia, Ukraine, the USA, New Zealand and Australia | The vulcanus logo is a trademark | COR-TEN® is a trademark of United States Steel Corporation

VULCANUS® Pro730 & Pro910 Rotisserie
main set

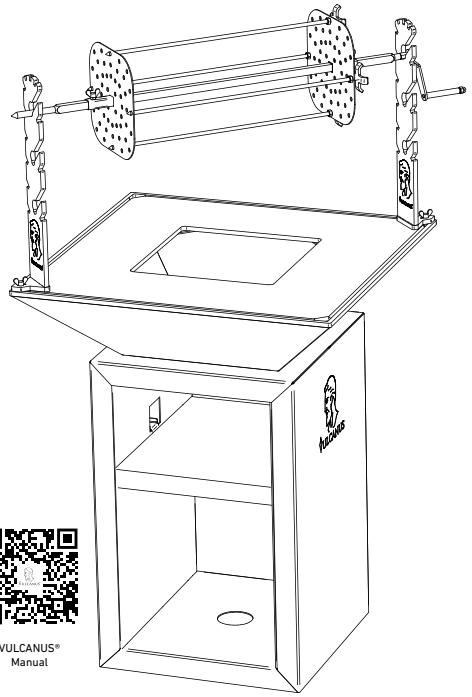
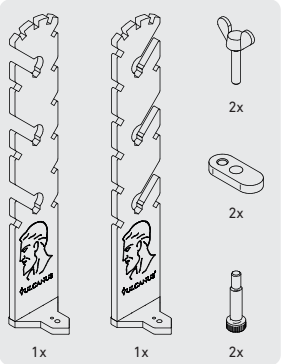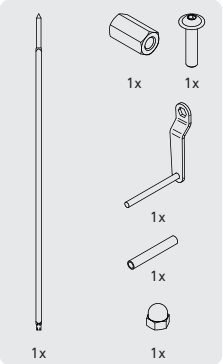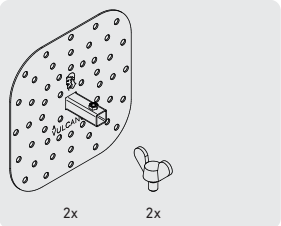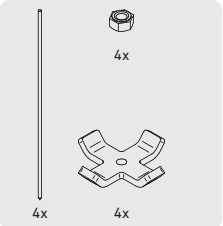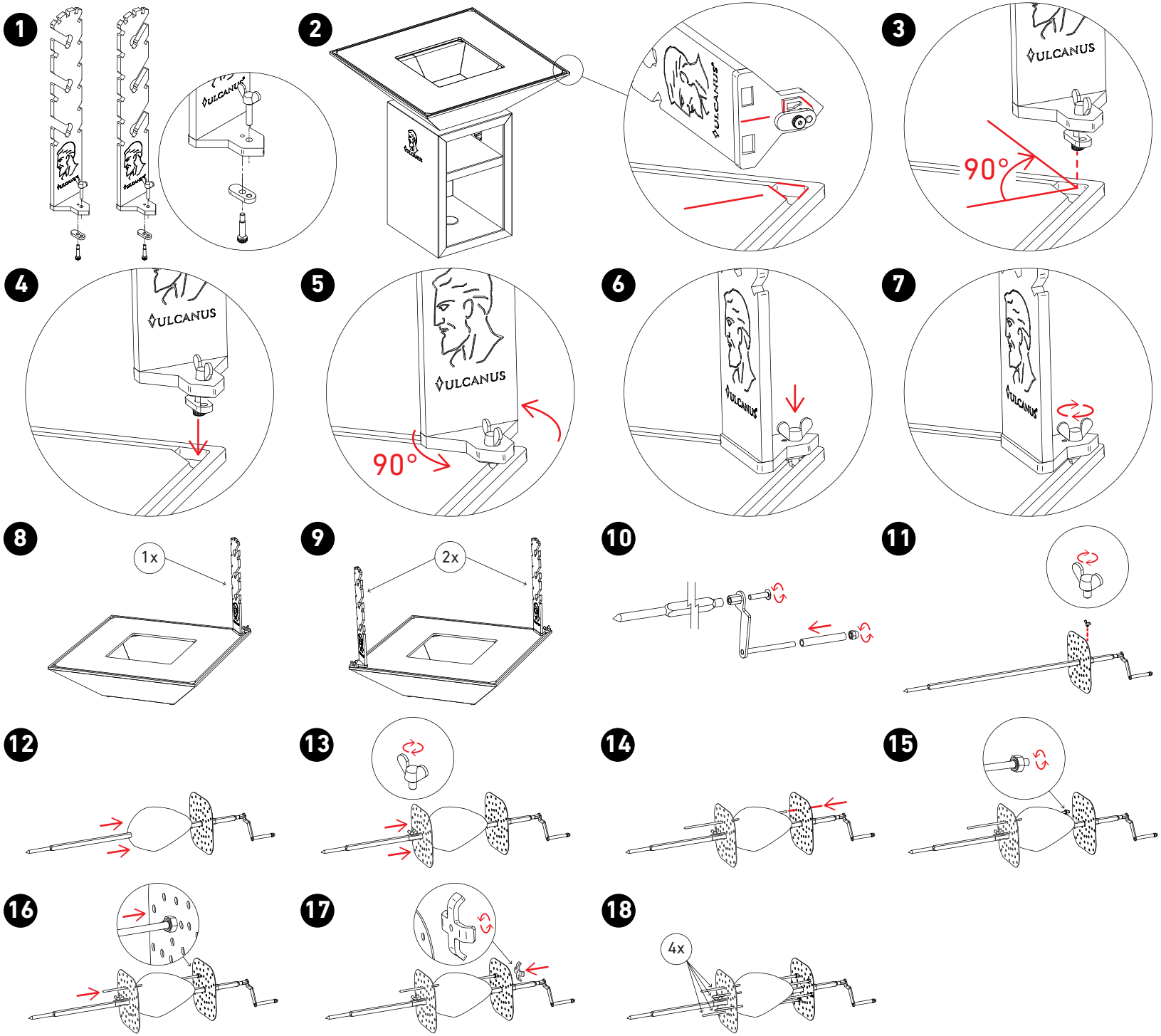
VULCANUS® Manual